SPYPOINT | FLEX G-36



USER MANUAL

v.1.1

INTRODUCTION

FLEX G-36 PRESENTATION

The FLEX G-36 is one many SPYPOINT trail cameras. While SPYPOINT has been a cellular trail camera leader for some time, the FLEX G-36 is a major step forward in customer-friendly and innovative design, optimized antenna, straightforward interface, TEST and FORMAT buttons, and automatic carrier connection technology.

The FLEX G-36 is a cellular trail camera that works with the SPYPOINT mobile app to:

- Send photos and videos to your smartphone or tablet.
- Check camera status.
- Manage camera settings and preferences.

The FLEX G-36 offers features and performance that are unheard of at its price point. The commitment to user value carries through to the FLEX G-36, even with all the new and innovative features that have been included. Hunters are loving the performance and flexibility the latest camera from SPYPOINT delivers.

THANK YOU FOR CHOOSING A SPYPOINT PRODUCT

This User Manual will introduce you to the features of your new FLEX G-36 and will guide you through the acquisition of its functionalities so that you can use it to its full potential.

Our priority is to offer outstanding service to our customers. If you need technical support for your camera, here is how to contact us:

Contact our chat service directly on the SPYPOINT site (in the lower right-hand corner of the Support section, by clicking on the "**Start Chat**" window, **www.spypoint.com**).

- Monday to Friday — **8:30 a.m. to 8:00 p.m.**
- Saturday-Sunday — **8:30 a.m. to 5:30 p.m.**

Go to **www.spypoint.com/en/support** for more information about our devices.

ABOUT US

SPYPOINT's mission is to offer you products that are easy to use, innovative, affordable, and of exceptional quality. Our products are mainly used in the hunting field and residential and commercial safety fields. They are distributed and appreciated on all continents and are continuously growing. Prosperous and respected, SPYPOINT is a company that is constantly developing new technologies and that remains attentive to its customer's needs to offer cutting-edge products with concrete solutions to improve hunting and outdoor activities.

JOIN THE SPYPOINT COMMUNITY

www.**facebook**.com/SPYPOINT

www.**twitter**.com/SPYPOINTcamera

www.**youtube**.com/SPYPOINTtrailcam

www.**instagram**.com/spypointcamera

www.**tiktok**.com/@spypointcamera

TABLE OF CONTENT



Components 4
Features 6
Power Supply 7
Memory Card 8
Preparation 10
Activation 11
Installation 12
Starting Your Camera 13
Configuration 14
Verification 16
Tool – Accessories – Options 18
Transferring Files to a Computer 19
Offered Accessories 20
Troubleshooting 21
Warranty 22
Regulation 23
Disposal & frequency 24

COMPONENTS

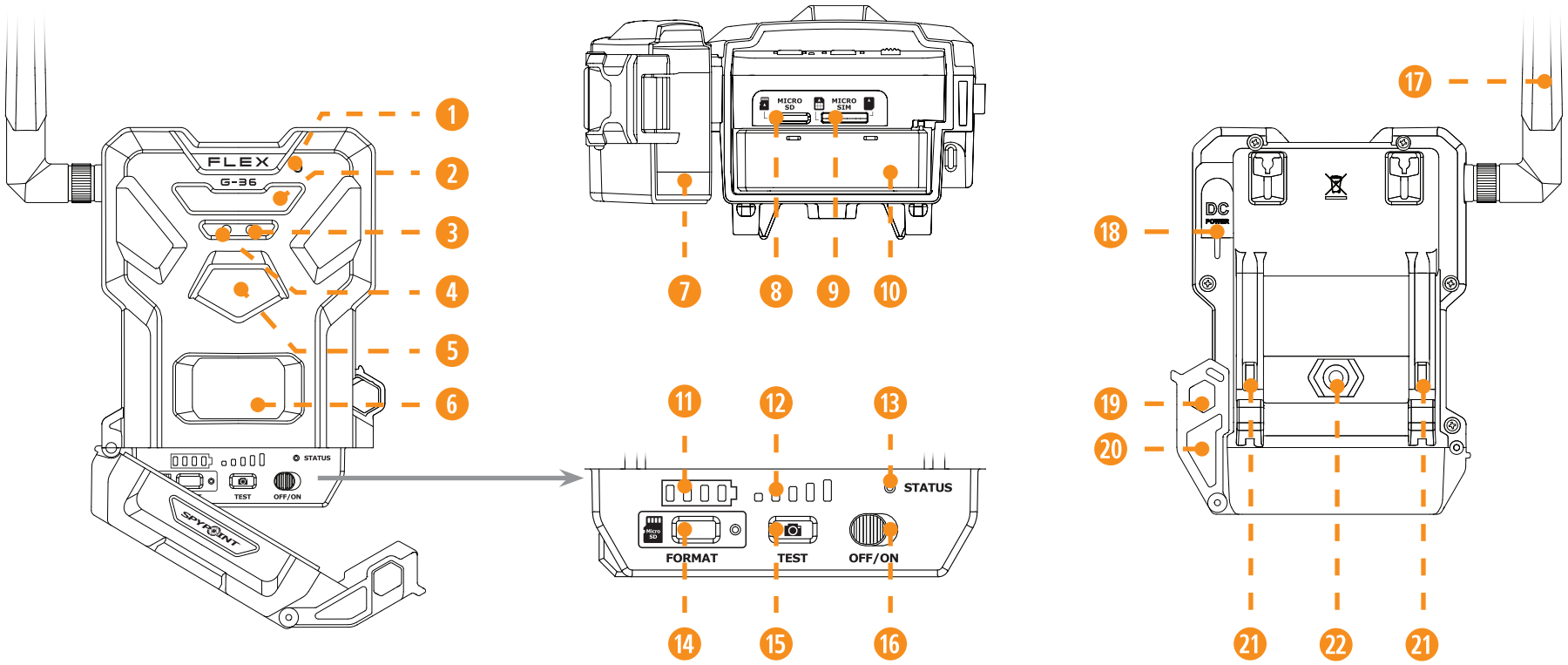

1. Microphone
2. IR LED
3. Light sensor
4. Delay light
5. Photo lens
6. Detection lens
7. Battery door
8. microSD card slot
9. Micro SIM card slots
10. Battery tray
11. Battery level
12. Signal level
13. STATUS light
14. FORMAT button
15. TEST button
16. OFF/ON switch
17. Antenna
18. 12 V jack
19. Cable lock hole
20. Locking latch
21. Slots for installation strap
22. Screw-thread for standard ¼"-20 tripod mount

COMPONENTS

1. **MICROPHONE**
Records sound in video mode.

2. **IR LED**
4 powerful LEDs that illuminate at night for clear black and white photos and videos.

3. **LIGHT SENSOR**
Detects the ambient lighting conditions for taking photos and videos: in colors during the day, black and white at night.

4. **DELAY LIGHT**
During installation, once the signal is found, this light flashes for 30 seconds to allow the user to walk away without being captured.

5. **PHOTO LENS**
Image sensor.

6. **DETECTION LENS**
Enlarges the detection area of the camera's motion sensor.

7. **BATTERY DOOR**
Provides access to the battery compartment, microSD card, STATUS light, and OFF/ON switch.

8. **microSD CARD SLOT**
Space to insert the microSD card (not included) needed to save photos and videos.

9. **MICRO SIM CARD SLOTS**
Space to insert two SIM cards. It is necessary to activate cellular functions. The SIM cards, pre-installed and preactivated, are included with the camera. It is important to use a SPYPOINT SIM cards (supplied by SPYPOINT), otherwise the cellular functions of the camera will be inoperative.

10. **BATTERY TRAY**
Removable device in which the 8 alkaline or lithium AA non-rechargeable batteries are inserted (not included with the camera).

11. **BATTERY LEVEL**
During startup, the camera will illuminate the number of lights corresponding with the current battery level of the camera.

12. **SIGNAL LEVEL**
During startup, the camera will illuminate the number of lights corresponding with the signal level. 5 bars being excellent and 1 bar being poor.

13. **STATUS LIGHT**
During installation, it flashes to indicate to the user the strength of the cellular signal. During regular operation, it indicates that the camera is recording or transferring files.

14. **FORMAT BUTTON**
This button will allow you to format the microSD card during the start up of the device.

15. **TEST BUTTON**
This button will allow you to send a photo to your app (if you have a transmission plan with remaining photos)

16. **OFF/ON SWITCH**
Allows the user to turn the camera OFF/ON.

17. **ANTENNA**
Captures the cellular signal.

18. **12 V JACK**
Allows you to insert a power cord connected to an external 12 V source.

19. **CABLE LOCK HOLE**
Allows you to install a #CLM-6FT padlock cable to secure the unit (sold separately).

20. **LOCKING LATCH**
Allows you to lock, unlock and open the door.

21. **SLOTS FOR INSTALLATION STRAP**
Allows the camera to be installed using the included installation strap.

22. **SCREW-THREAD FOR STANDARD ¼"-20 TRIPOD MOUNT**
Allows you to attach a standard tripod from ¼"-20.

FEATURES

CELLULAR TRANSMISSION	
Network	LTE Multi-carrier auto connectivity
Transmission plan	Transmission of your photos and videos to your SPYPOINT application by cellular network. Visit **www.spypoint.com/plans** to choose a plan that suits you.
Camera configuration	Fully configurable remotely with the free SPYPOINT app.
PHOTO RECORDING	
Photo resolution	36 MP
Photo file format	JPG
Time-lapse mode	Time-Lapse and Time-lapse+ (Time-lapse with motion detection enabled)
Multi-shot mode	Up to 3 photos per detection
Info bar	Date, time, temperature (°C/°F), moon phase, SPYPOINT logo, and camera model
Capture mode	Colors by day, black and white by night
VIDEO RECORDING	
Video resolution	1 920 X 1 080 (FHD 1080p)
Video file format	MP4
Video length	15 seconds
Capture mode	Colors by day, black and white by night
AUDIO RECORDING	
Audio mode	Yes
MEMORY	
External memory	microSD card up to 512 GB (not included)
VIEWING	
On the SPYPOINT app or on the website **www.spypoint.com/en/manage**	

POWER SOURCES	
Alkaline or lithium AA non-rechargeable batteries	8 x AA (not included)
Lithium battery pack	Lithium battery pack #LIT-22 (not included)
External 12 V battery	12 V battery Optional accessories available at SPYPOINT: #KIT6V-12V, #KIT-12V, #BATT-12V
Solar panel lithium battery	Solar panel lithium battery #SPLB-22 (not included)
DETECTION SYSTEM	
Movement detector	Infrared
Detection angle	50°
Detection range	Up to 30 meters/100 feet
Trigger speed	0.3 seconds
Delay between each detection	Adjustable from Instant to 30 minutes
ILLUMINATION OPTIONS	
LED	4 powerful LEDs
Night light range	Up to 30 meters/100 feet
Exposure	Automatic adjustment of the infrared illumination
PHYSICAL DIMENSIONS	
10,67 cm (H) x 13 cm (W) x 7.88 cm (D)	4.2" (H) x 5.14" (W) x 3.1" (D)
RECOMMENDATIONS	
Operating temperature	-30 °C to 50 °C (-22 °F to 131 °F)
Storage temperature	-40 °C to 60 °C (-40 °F to 140 °F)

POWER SUPPLY

CHOOSING A POWER SOURCE

Its not required to add additional power sources to your camera, but you may want to extend the overall time between visits.

4 options are available to you:

- **Alkaline or lithium AA batteries**
- **Rechargeable battery 12 V** (#KIT-12V sold separately)
- **Rechargeable battery pack 7.4 V** (#LIT-22 sold separately)
- **Solar panel lithium battery 12 V** (#SPLB-22 sold separately)

FOR BEST RESULTS AND NO LEAKAGE

- Do not mix new and old batteries.
- Always purchase the correct size and grade of battery most suitable for the intended use.
- Replace all batteries in a set at the same time.
- Clean the battery contacts and those of the device prior to battery installation.
- Ensure that the batteries are installed correctly with regard to polarity (+ and -).
- Remove batteries from equipment that is not to be used for an extended period of time.
- Remove used batteries promptly.
- Do not use rechargeable AA batteries (their lower voltage will generate operational issues).
- When batteries of different brand or type are used together, or new and old batteries are used together, some batteries may be over-discharged due to a difference in voltage or capacity. This can result in venting, leakage, and rupture and may cause personal injury.

HOW TO INSTALL AA BATTERIES PROPERLY

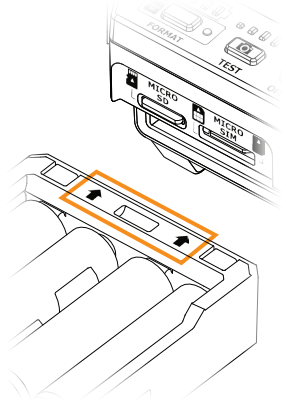

- Unlock the latch and open the FLEX G-36 door.
- Place the battery holder back into the battery compartment with arrows facing up (See Photo)
- Insert the AA batteries into the battery holder following polarity (+) and (-) indications.
- Place the battery holder back into the battery compartment.

SPLB-22 – SOLAR PANEL LITHIUM BATTERY COMBO UNIT



- Combines solar panel and lithium battery into one unit to reduce wires and setup time.
- Plugs directly into camera to provide extensive, ongoing battery life for your camera so you can avoid visits.
- Additional jacks and plugs allows for device flexibility.

MANAGING VARIOUS CAMERA POWER SUPPLY

If you choose to plug an external 12 V battery (#KIT-12V, sold separately) into your camera, it becomes your camera's new primary power source. The AA batteries will only be used once the 12 V battery is depleted.

You can check the battery level on your device or in the mobile application:

- In the application: on the home page, you will see the battery charge level for each of your devices. You can access more details on the status of your battery by going to the STATUS page. When the battery logo turns red, we suggest that you change the batteries before it is completely drained.
- Once the device is powered on. There are four green lights within the battery icon indicating the battery level.

MEMORY CARD

INSTALLING A MEMORY CARD (NOT INCLUDED)

The use of a memory card is necessary for the operation of the camera. It is used to save photos, videos and other camera status files. Note that photos and videos in their original format are kept on the memory card. The files sent to your application are lighter versions. You can retrieve your photos and videos at any time by removing the card from the camera and transferring the contents to another device (e.g.: computer).

Your camera requires a microSD memory card, with a maximum capacity of 512 GB, sold separately. Here is a table showing the approximate quantity of photos or videos that can be recorded on the card, according to different memory card capacities.

MEMORY	4 GB	16 GB	32 GB	128 GB	512 GB
PHOTOS (36 MP)	1 700	7 000	13 900	55 700	222 900
VIDEOS (1080P)	627	2 508	5 016	20 064	80 256

INSERTING YOUR MEMORY CARD

- Ensure the camera is turned OFF.
- Find the microSD card slot. It is located at the bottom of the camera (see photo).
- Insert a microSD card (up to 512 GB) in the microSD card slot with the metal contacts facing up.
- The card is inserted correctly when a click is heard.

NOTE

The FLEX G-36 is equipped with continuous mode. This means that when the memory card is full, the camera continues to save your photos and videos by erasing the first recorded files.

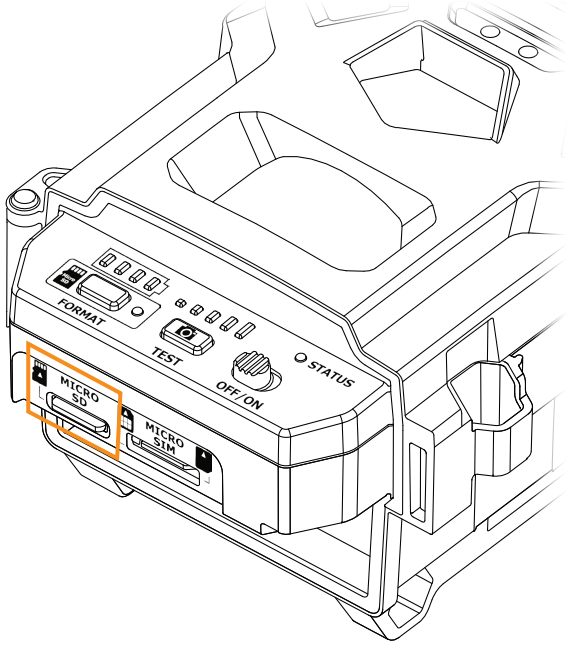

MEMORY CARD

REMOVING YOUR MEMORY CARD

- Before removing a memory card, always turn your camera OFF to prevent files on the card from being deleted or damaged.
- To remove the card, push it lightly into the camera until you hear a click. Then take it out of the device.

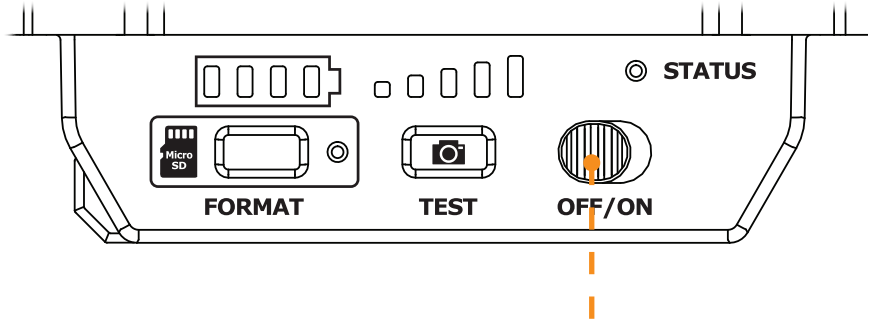

FORMATTING THE MEMORY CARD

During the start up of the camera, you can use the FORMAT button on the device to quick format the microSD card. This is required if you want to be able to take photos and videos while transmitting.

1. Turn ON the camera.
2. Press and hold the FORMAT button for 5 seconds.
3. The microSD light will blink green while the card is formatting.
4. Once complete, the microSD light will become solid green.

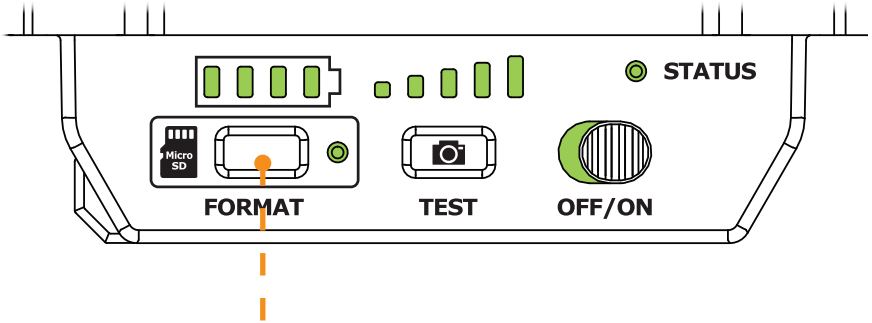

SCREW IN ANTENNA

The antenna doesn't come installed. Please insert as shown in the photo.

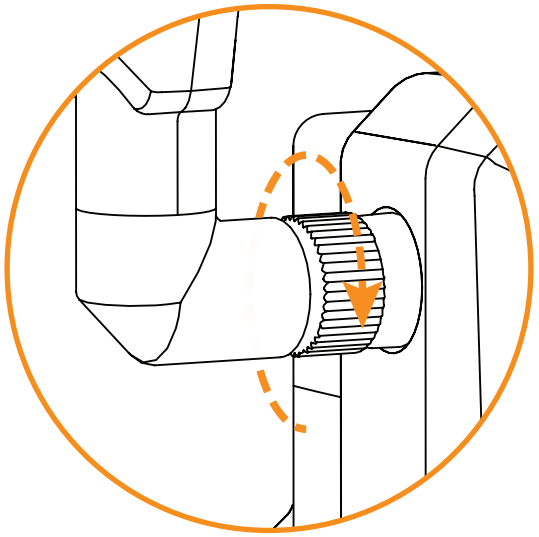

ACTIVATING YOUR CAMERA

Before you can use your camera, you must activate it.
To do so, you will need the activation code.

FINDING THE ACTIVATION CODE

The activation code is located inside the FLEX G-36's battery compartment.

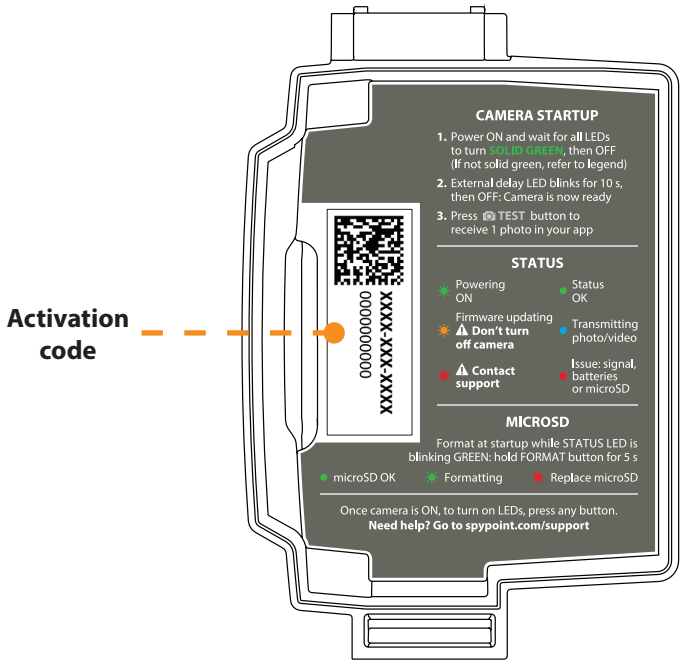

ACTIVATION

SPYPOINT APP - NEW USERS

On your mobile device or a computer, use the web browser and navigate to **www.spypoint.com**, select "**LOGIN**" in the top navigation menu. On the displayed **"SPYPOINT"** page, select **"CREATE AN ACCOUNT"**, fill out the required fields, then log in. Once your account is created you can either continue to use the web version of the application or you can switch to the mobile application.

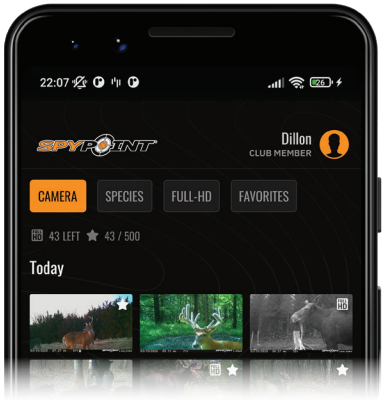

If you choose to use the SPYPOINT app to activate your device, follow these steps:

1. On Google Play™ or the App Store™, search for "**SPYPOINT"**.
2. Download and install the app on your smartphone or tablet.
3. Start the app. Select "**LOGIN**". Enter your account information and select "**LOGIN**".
4. Select the "**CAMERAS**" tab at the bottom of the screen and press the orange **+** button.
5. In the list, select "**FLEX G-36**" then follow the steps to scan your data matix code.
6. When complete, you will see the camera in the camera list.

If you choose to use our SPYPOINT website to activate your device, follow these steps:

1. On the **www.spypoint.com** website, select "**LOGIN**" in the top navigation menu. On the displayed "**SPYPOINT**" page, login using your account information. Then press the "**LOGIN**" button.
2. Select the **+** sign on the far right of the page; in the list, select "**FLEX G-36**" then follow the steps.
3. When complete, you will see the device in your camera list.

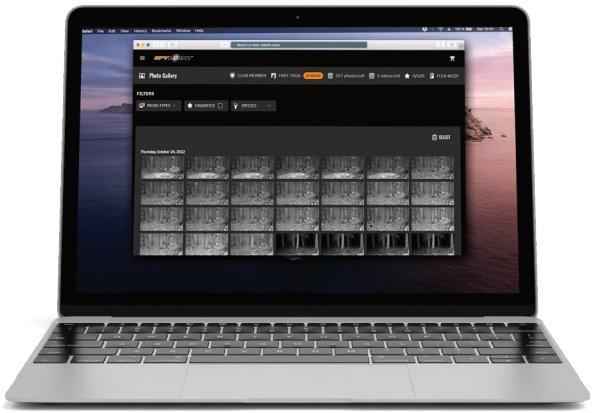

CHOOSING A PHOTO TRANSMISSION PLAN FOR YOUR CAMERA

Go to **www.spypoint.com/en/spypoint-experience/plans** to read the latest offers and choose the plan that suits you.

INSTALLATION

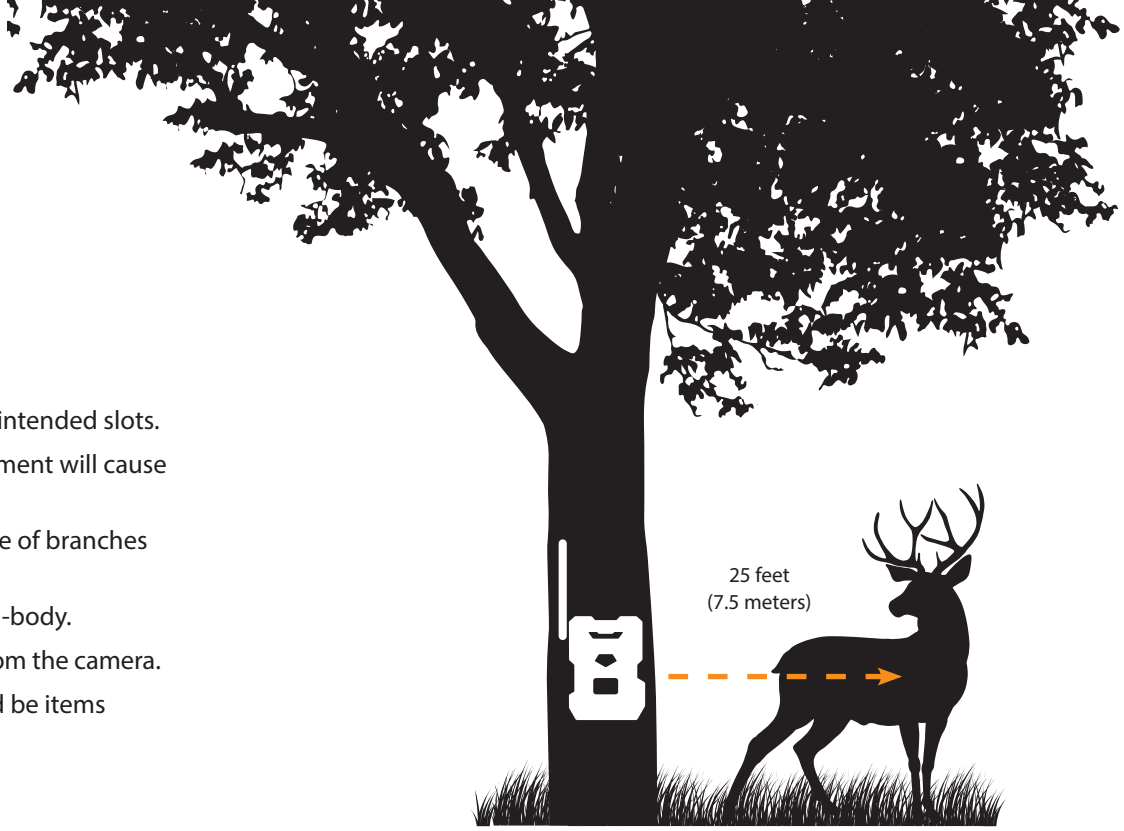

INSTALLING YOUR CAMERA

1. To install the camera, loop the installation strap through the intended slots.
2. Choose a solid tree that does not move in the wind, as movement will cause false detections.
3. Make sure the area immediately in front of your camera is free of branches or twigs that could be blown away by the wind.
4. The camera should be at the same height of the animal's mid-body.
5. The targeted animal should be at 25 feet (7.5 meters) away from the camera.
6. To produce brighter photos and videos at night, there should be items reflecting the camera's flash in the background.

STARTING YOUR CAMERA

IMPORTANT VERIFICATIONS BEFORE STARTING YOUR CAMERA:

- ✓ The antenna is installed (antenna support removed).
- ✓ The 8 AA batteries or LIT-22 are inserted in the camera's battery compartment.
- ✓ The microSD card is formatted and inserted in the camera.
- ✓ The camera is activated.
- ✓ The camera is securely installed.

1. Turn ON the camera.
2. The green STATUS light will flash, the battery level will be displayed.
3. The signal lights will flash together until signal is found. Once signal is found number of bars will correspond to the signal strength.
4. The microSD light will be ON.
5. The delay light will blink for 10 seconds, and the STATUS light will turn solid green.
6. All lights will turn OFF and the camera will go into standby mode – awaiting a trigger.

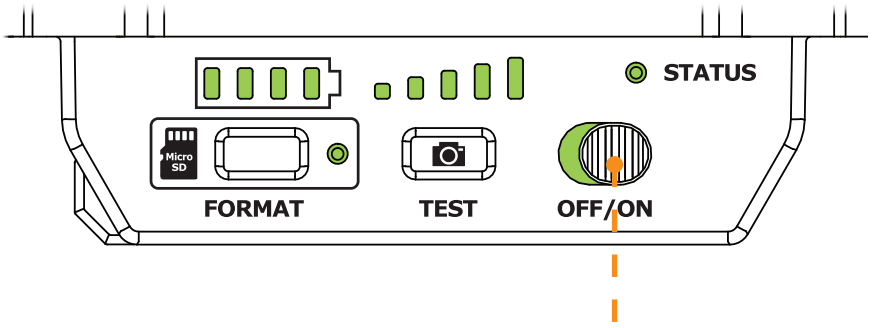

OPERATIONAL VALIDATION TEST

You can use the following test to make sure everything works as it should:

TEST BUTTON

The TEST button forces the camera to take a single photo and transmits it. It will NOT work if the camera is already busy with another task. (Synchronizing with the server, recording a photo/video or running through the start up sequence of the camera.) This button will only work if the camera is on an active transmission plan with photos remaining.

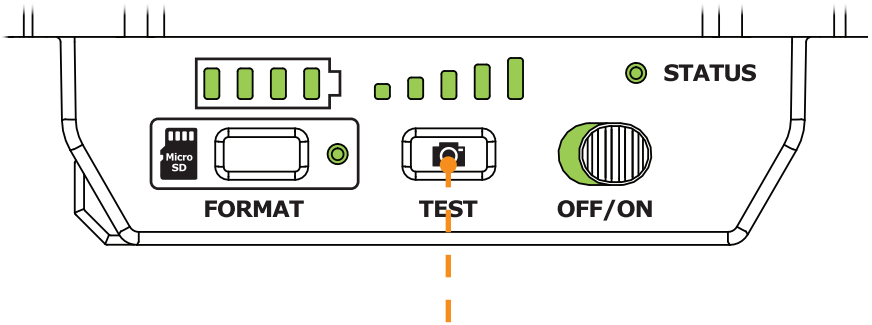

1. After the camera has started, and passed through the startup light sequence, the TEST button can be used. Ensure all lights are OFF before proceeding.
2. Press the TEST button for at least 1 second.
3. Battery level will be displayed.
4. Signal lights will blink together every second until the camera receives the signal strength. Then it will display the number of lights corresponding to the signal strength.
5. All Lights will turn OFF.

MANAGE DEVICE

Use the SPYPOINT app to configure your camera.

EDIT DEVICE NAME All possible values	Allows you to name the camera for easy identification. This function is very useful for users with more than one camera.
RESTORE FACTORY SETTINGS Restore	Allows you to reset the camera to its original state.

IMAGE CAPTURE

CAPTURE MODE Photo; video; time-lapse; time-lapse+	• **Photo:** The camera will capture photos based on the motion detection. • **Video:** The camera will capture video clips based on motion detection. • **Time-lapse:** The camera will capture photos based on a schedule set by the user. • **Time-lapse+:** The camera will capture photos based on a schedule set by the user and also capture photos based on the motion detection.
MOTION DELAY Instant; 10 seconds; 20 seconds; 30 seconds; 40 seconds; 50 seconds; 1 minute; 3 minutes; 5 minutes; 10 minutes; 15 minutes; 20 minutes; 30 minutes; 1 hour	Allows you to choose the period of time to wait before the camera detects again and records the next photo/video. A longer delay minimizes the number of photos and videos taken and therefore maximizes battery life. A shorter delay maximizes surveillance in the area but consumes more power. Shorter delays are recommended when the camera is used for security purposes.
SD PHOTO RESOLUTION High/optimal	Allows you to determine the quality of the photos saved on your microSD card. Optimal quality: 36 MP or high quality: 2 MP.
MULTI-SHOT 1; 2; 3	Allows you to take 2 or 3 consecutive photos at each detection, with a 5-second delay between each photo.
SENSITIVITY Low; normal; high	Allows you to choose the detection sensitivity of the device. A higher sensitivity allows you to detect movement in front of the camera more effectively, so the camera will take more pictures.

CELLULAR

DAILY SYNC TIME All possible combinations	Allows you to choose the time when the camera makes its first transfer of the day, each day. **Note**: The camera transfers are configured by default with 6 times per day, determined from the time you activated your camera. For example, if your camera was activated at 1:42 p.m., this will be the default first transfer time. The next transfer will be at 5:42 p.m.
SYNC FREQUENCY 1; 2; 4; 6; 12; each detection	Allows you to choose the number of transfers the device performs each day.
CELLULAR Activated/not activated	Allows you to activate or deactivate the cellular mode. Note that this setting will only take effect the next time the camera makes a transfer.
TAKE A PHOTO/VIDEO AT EACH SYNC Activated/not activated	During the next transfer, the camera will automatically take a photo or a video and communicate it to your application.

CAMERA COMMANDS

UPDATE FIRMWARE	Allows you to request a firmware update to your device.

GENERAL

DATE FORMAT MM/DD/YYYY or DD/MM/YYYY	Allows you to choose the date format displayed.
TIME FORMAT 12 h or 24 h	Allows you to choose the time format displayed.
BATTERY TYPE Automatic or AA_LIT	Allows the user to select the battery type installed in the camera.

VERIFICATION

VERIFYING CAMERA STATUS

Different tools are available to help you check the status of your FLEX G-36 and to inform you of any problems that may occur during its operation. In this section, we will see **3 tools**:

NOTIFICATIONS

The camera was designed to send notifications to your SPYPOINT app. This is to help you stay informed of the status of your camera.

You will receive a notification on your smartphone at the next transfer when a photo/video is received or important notification is sent:

- You forget to insert a microSD card in your camera.
- The inserted microSD card is not compatible with your camera.
- The battery percentage is too low.

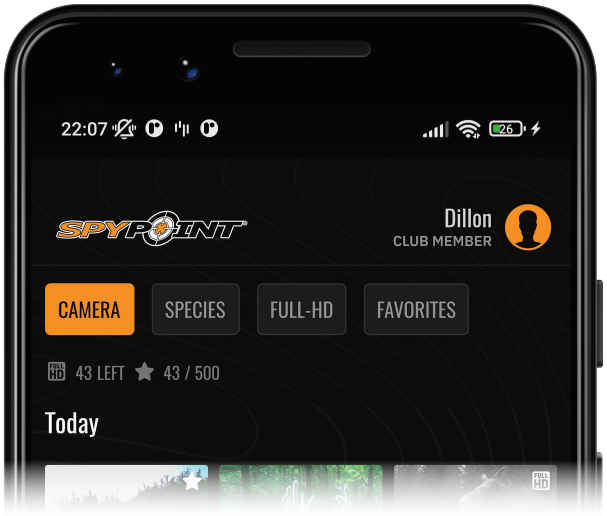

APPLICATION STATUS PAGE

Here are the different indicators of the FLEX G-36 status you have access to. They are accessible on your app or on the SPYPOINT website. What appears in this page is a reflection of the camera at the last communication.

SIGNAL Strength of the cellular signal	1 - 5 bars
BATTERY Battery percentage remaining	0 - 100% (AA/LIT-22/12 V)
MEMORY CARD Used space	0 - 100%
LAST COMMUNICATION The date and time of the last device transfer	Date and time
TEMPERATURE	°C or °F
POSITION GPS	GPS coordinates
MODEL	FLEX G-36
VERSION Displays the firmware version	VX.XX.XX
LAST INSTALLATION Last time your camera was turned ON	Date and time
SIM Number on your SIM card	89……
ACTIVATION CODE	XXXX-XXX-XXXX

VERIFICATION

STATUS LIGHT EXPLAINED

STATUS LED COLOR		PATTERN	INDICATION
	Green	Solid	When device gets triggered or is taking a photo or video
	Blue	Solid	When photo or video is getting transmitted
	Blue	Blinking each second till the reset is complete	Factory reset
	Orange	Blinking each second for 30 secondes	Firmware update
	Red	Solid (does not go OFF)	No signal detected
	Red	Slow blinking (every 2 seconds)	SIM issue/Critical hardware failure



SPYPOINT MOBILE APP

The key to a successful hunt is information and that's what the SPYPOINT app is all about. View and sort all your photos and videos from the field, check hunting conditions, update camera settings, manage stand locations on your property, and more, right from your mobile device. It's the mobile scouting solution you need to go into the woods confidently.

From the app, you can:

- Manage camera statuses, settings and plans
- View and manage photos and videos
- Sort photos with advanced AI species filters
- Request FULL-HD photos and videos
- Maintain custom maps and markers
- Monitor weather conditions

To learn more visit **www.spypoint.com/app**

PHOTO TRANSMISSION PLANS

SPYPOINT makes choosing a photo transmission plan as easy as possible with straightforward photo count thresholds and the option to go month-to-month to maximize flexibility, or annually to get the most savings. SPYPOINT even offers a free plan, sending 100 photos every month at no charge.

To learn more visit **www.spypoint.com/plans**

SPYPOINT WEB APP

As well as with the SPYPOINT mobile app, you can manage your device and photos/videos using the web app.

Log in at **www.webapp.spypoint.com** to manage cameras and view photos and videos online.

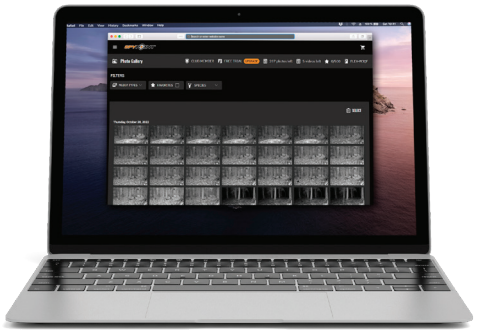

TRANSFERRING FILES TO A COMPUTER

- Turn the camera OFF.
- Remove the microSD card from the camera.
- Insert the microSD card in the microSD computer slot, or use a USB adapter for microSD cards.
- The computer will recognize the microSD card. There may be two different disks recognized, this is normal after use in the FLEX G-36.
- If the computer doesn't detect the microSD card, this means the memory card is corrupt and needs to be replaced.

ON A PC

On your desktop, click on "**My Computer**" or "**This PC**".

Locate your device under "**Removable Disk**" and click to access it. Then, click on "**DCIM**" and "**100DSCIM**" to find all saved photos and videos. If you do not see the photos or videos in the folder you checked, try again in the other "**Removable Disk**" folder.

Select the files you want to copy. With some Windows versions, the simplest way is to select them by clicking on the "**Home**" tab and choosing "**Select all**" on the right side. With some Windows versions, you can press on "**Ctrl**" and "**A**" or click on the "**Edit**" menu and choose "**Select all**".

Click on the "**Copy**" icon on the left of the ribbon (or hold the "**Ctrl**" and "**C**" keys).

Once your photos and videos are transferred, click the **"Safely remove hardware and eject media"** button located in the task bar, then click **"Eject mass media storage device"**.

If you do not want to select all photos or videos, hold down the "**Ctrl**" key and click on the files you want to select before clicking on the "**Copy**" icon.

Access the folder where you want to save your photos and videos or create a new folder by clicking on the "**New folder**" button. (You can also click on "**Ctrl**", "**Shift**", and "**N**" to create a new folder, or right-click in a blank space in the "**Pictures**" folder and choose "**New**", then, in the following menu, click on "**Folder**".)

Enter a name for your new folder, click on "**Enter**", then double-click on the folder to open it. In the "**Home**" tab, choose "**Paste**" (or click simultaneously on the "**Ctrl**" and "**V**" keys). The photos and videos will be copied in the new folder.

ON A MAC

Click on the search tool in the "**Toolbar**". Click the **"Go"** Tab, then select **"Computer"**.

Locate your device under the **"Locations"** tab and click to access it. Then click on **"DCIM"** and **"100DSCIM"** to find all saved photos and videos.

Click on **"Edit"** in the toolbar at the top of the screen, then click on **"Select all"** to highlight all individual files on the device. You can also access the **"Select all"** option by simultaneously clicking **"Cmd"** and **"A"**. If you don't want to import everything, you can highlight the desired photos or videos individually. Transfer photos and videos by clicking on **"Cmd"** and on the file name. Click on **"Edit again"** and then **"Copy"** (or **"Cmd"** and **"C"**) to copy the highlighted files.

Access the folder where you want to save your photos and videos, or create a new folder by right-clicking and pressing **"Cmd"** at the same time, then select **"New folder"** from the menu.

Click on **"Modify"**, then on **"Copy"** (or **"Cmd"** and **"V"**) to copy your chosen files in the selected folder. The photos and videos can take a few minutes to download, depending on the size and the number of the file you are importing.

Once your photos and videos are transferred, click on the **"Eject"** icon beside the name of your device, than unplug the device from your MAC.

OFFERED ACCESSORIES



LITHIUM BATTERY SOLAR PANEL

Compatible with all SPYPOINT devices with a 12 V socket. DC power adapter, mounting bracket and installation strap.

#SPLB-22



12 V BATTERY, CHARGER & HOUSING KIT

Compatible with all SPYPOINT devices with a 12 V socket. Case, AC charger, 12 ft (3.6 meters) power cable (#PW-12FT) and strap included.

#KIT-12V



RECHARGEABLE LITHIUM BATTERY PACK

Rechargeable lithium battery pack and charging cable included. 7.4 voltage.

#LIT-22



FLEX CAMERA STEEL SECURITY BOX*

Fits the SPYPOINT FLEX cameras.

#SB-500



ADJUSTABLE MOUNTING ARM

Fits any camera with a standard ¼"-20 screw-in tripod mount.

#MA-500



12 V POWER CABLE

12 feet (3.6 meters) cable with alligator clips to connect to a 12 V camera battery.

#CB-12FT



LONG RANGE CELLULAR ANTENNA

Boosts the cellular signal. 15 feet (4.57 meters) cable. No external power source necessary.

#CA-01



CABLE LOCK

6 feet (4.57 meters) cable lock compatible with all cameras and security boxes from SPYPOINT.

#CLM-6FT



32 GB MICROSD CARD

Package including a 32 GB microSD card and an adapter. High speed, class 10. 10-year warranty.

#MICRO-SD-32GB

For more information about other available accessories, got to **www.spypoint.com**.

*Steel boxes may affect wireless connectivity, especially in low-reception areas.

TROUBLESHOOTING

ISSUES	POSSIBLE SOLUTIONS
MY CAMERA DOES NOT TURN ON	1. Check to ensure the camera has good batteries. 2. Slide the power switch to the off position and then back to the on position.
MY CAMERA DOESN'T HAVE GOOD SERVICE	1. Ensure the antenna is properly attached to the camera. 2. Move the camera to a different location.

LIMITED WARRANTY

This SPYPOINT product is covered by a 2-year warranty that also covers parts and workmanship from the purchase date. The electronic cash register receipt is a proof of purchase and must be presented to confirm that the warranty is applicable. This warranty will be honored in the country of the original purchase only.

THIS SPYPOINT WARRANTY DOESN'T APPLY TO:

- Consumable parts, including but not limited to batteries, the performance of which are known to decrease over time.
- Damages caused by improper use of the device, use of the device with another product, negligence, accidents, contact with liquid, fires, earthquakes, or any other type of external causes.
- SPYPOINT products bought online from an unauthorized retailer.
- Products that were modified or altered.
- Aesthetic damages, including but not limited to scratches or plastic breakage.
- Damages caused by the usage of a product outside of the SPYPOINT recommendations.

FCC STATEMENT

Changes or modifications not expressly approved by the party responsible for compliance could void the user's authority to operate the equipment.

This equipment has been tested and found to comply with the limits for a Class B digital device, pursuant to Part 15 of the FCC Rules. These limits are designed to provide reasonable protection against harmful interference in a residential installation. This equipment generates uses and can radiate radio frequency energy and, if not installed and used in accordance with the instructions, may cause harmful interference to radio communications. However, there is no guarantee that interference will not occur in a particular installation. If this equipment does cause harmful interference to radio or television reception, which can be determined by turning the equipment off and on, the user is encouraged to try to correct the interference by one or more of the following measures:

- Reorient or relocate the receiving antenna.
- Increase the separation between the equipment and receiver.
- Connect the equipment into an outlet on a circuit different from that to which the receiver is connected.
- Consult the dealer or an experienced radio/TV technician for help.

This device complies with part 15 of the FCC rules.
Operation is subject to the following two conditions:

1. This device may not cause harmful interference.
2. This device must accept any interference received, including interference that may cause undesired operation.

CE STATEMENT

Herby, SPYPOINT declares that this trail camera model FLEX G-36 is in compliance with the essential requirements and other relevant provisions of Directive 2014/53/EU. In accordance with Article 10(2) and Article 10(10), this product allowed to be used in all EU member states.

Use the FLEX G-36 in the environment with the temperature between -1°C and 35°C.

IC STATEMENT

This device complies with Industry Canada's licence-exempt RSSs.
Operation is subject to the following two conditions:

1. This device may not cause interference.
2. This device must accept any interference, including interference that may cause undesired operation of the device.

The term "IC:" before the certification/registration number only signifies that the Industry Canada technical specifications were met. This product meets the applicable Industry Canada technical specifications.

DISPOSAL & FREQUENCY

DISPOSAL

ONLY USE ORIGINAL SPARE PARTS AND ACCESSORIES.

If, one day, your camera has been used so intensively that it has to be replaced, or if you no longer have any use for it, you are obliged to dispose of it at a recycling center.

Information on return points for your electrical appliance can be obtained from your local waste disposal company or from your local administrative offices.

Electrical appliances not only contain valuable recyclable raw materials, but also substances which, if disposed of improperly, can affect public health and the environment. Help ensure that valuable raw materials are recycled by returning your old appliance to a central collection point.

The WEEE (Waste Electrical and Electronic Equipment Directive) symbol represents the obligation for the labeled camera to be sent to a separate center for the proper recycling of electrical and electronic equipment.

CAN ICES-3(B)/
NMB-3(B)

Natural Resources Canada | Ressources naturelles Canada

FREQUENCY

FREQUENCY RANGE:

800/850/900/1900/2100 MHz

MAXIMUM TRANSMISSION POWER:

FREQUENCY	MAX.
GSM850	33 DBM ± 2 DB
EGSM900	33 DBM ± 2 DB
DCS1800	30 DBM ± 2 DB
PCS1900	30 DBM ± 2 DB
GSM850 (8-PSK)	27 DBM ± 3 DB
EGSM900 (8-PSK)	27 DBM ± 3 DB
DCS1800 (8-PSK)	26 DBM ± 3 DB
PCS1900 (8-PSK)	26 DBM ± 3 DB
UMTS 2100	24 DBM + 1,7/-3,7 DB
UMTS 1900	24 DBM + 1,7/-3,7 DB
UMTS 900	24 DBM + 1,7/-3,7 DB
UMTS 850	24 DBM + 1,7/-3,7 DB
UMTS 800	24 DBM + 1,7/-3,7 DB

SPYPOINT FLEX G-36 | Made in India
12 V DC • LIT-22 Lithium battery pack • 8 X R6 (AA) batteries (2 X 6 V)
Contain FCC ID: XMR201807EG91NA • **IC:** 10224A-2018EG91NA

Manufacturer: SPYPOINT
Address: 330 de la Jacques-Cartier, Victoriaville QC G6T 1Y3 • Canada
E-mail: info@spypoint.com

Importer Information: SPYPOINT
Company Name: SPYPOINT
Address: 330 de la Jacques-Cartier, Victoriaville QC G6T 1Y3 • Canada

Distribution Center 3000 Gannett Avenue, Des Moines IA 50321 • USA
EUROHUNT GmbH Harzblick 25, 99768 Harztor OT Ilfeld • Germany